# XS-MH300HX2W 300 Style Moving Head Case

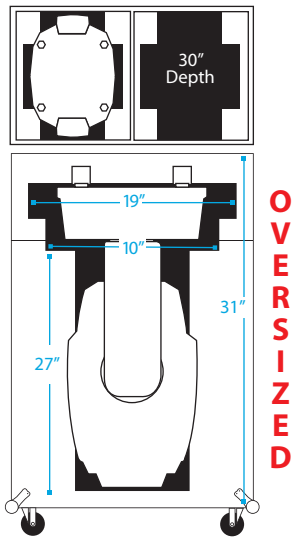


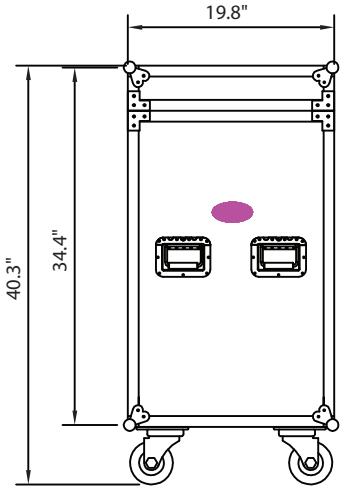


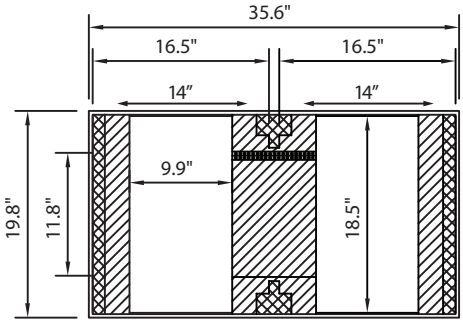


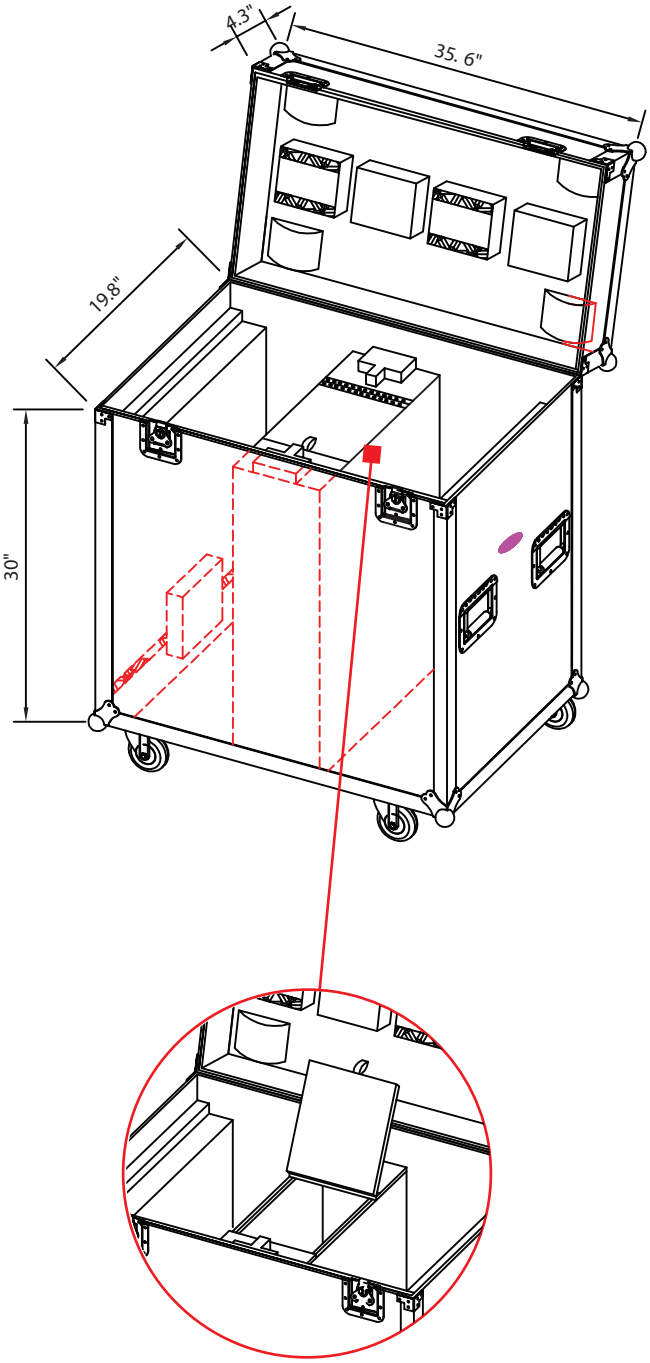


ProX® reserves the rights alter or make changes to existing designs, styles, features, colors, dimensions and other specifications without prior notice or consent. Nov. 7, 2018